HUVYK SPOL. S. R. O.
P. O. Hviezdoslava 843/22,
018 51 Nová Dubnica
tel.:+421 42 44 311 82, mail: info@huvyk.sk

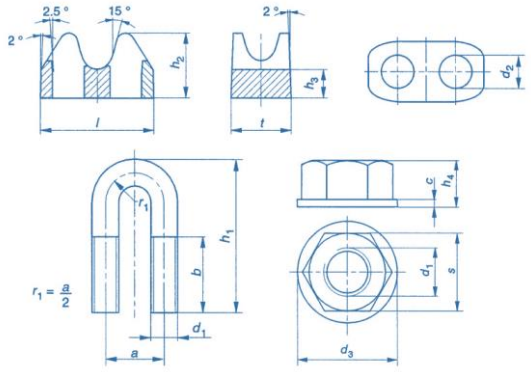

Názov produktu: Svorka lanová

Norma: EN 13 411-5

Veľkosť mm	Menovite rozmery (mm) a	b	d1	h1	d2	h2	h3	l	t	c	d3	h4	s				Hmotnosť kg/ks	Uťahovací moment [Nm]	Material	Povrchová úprava
5,0	12,0	13,0	M5	25,5	6,0	13,0	5,5	25,0	13	1,4	11	5	8				0,021	2	Bolt - grade 6.8	zinok elektrolyticky a žlté chrómovanie
6,5	14,5	17,0	M6	32,0	8,0	14,0	6,0	30,0	16	1,6	13	5,5	10				0,035	3,5		
8,0	18,0	20,0	M8	42,0	10,0	18,0	9,0	39,0	20	1,7	17	8	13				0,086	6		
10,0	20,0	25,0	M10	46,0	10,0	21,0	9,0	39,0	20	1,7	17	8	13				0,091	9		
12,0	25,0	30,0	M12	56,0	12,0	25,0	11,0	49,5	23,5	1,9	20	10	16				0,172	20		
14,0	28,0	32,0	M14	67,0	16,0	30,0	13,5	57,0	28	2,5	24	12	18				0,270	33		
16,0	34,0	36,0	M14	79,0	17,0	36,0	16,5	64,0	32	3,4	28	13	21				0,432	49		
19/20	38,0	40,0	M16	86,0	17,0	41,0	17,5	67,0	32	3,4	28	13	21				0,486	68		
22,0	41,5	44,0	M20	97,0	19,0	44,5	20,0	73,5	34	3,4	30	15,5	24				0,654	107		
26,0	47,5	52,0	M20	120,0	24,0	51,5	23,0	83,5	38	4,5	37	23	30				1,090	147		
30,0	56,0	56,0	M20	135,0	24,0	59,0	27,0	93,5	41	5	37	23	30				1,380	212		
34,0	60,0	68,0	M22	150,0	25,5	66,5	30,0	107,0	46,5	7	45	29	34				2,114	296		
40,0	68,0	70,0	M24	169,0	27,0	77,0	32,5	120,0	50	7	45	29	34				2,748	363		