**HUVYK SPOL. S. R. O.**
P. O. Hviezdoslava 843/22,
018 51 Nová Dubnica
tel.:+421 42 44 311 82, mail: info@huvyk.sk

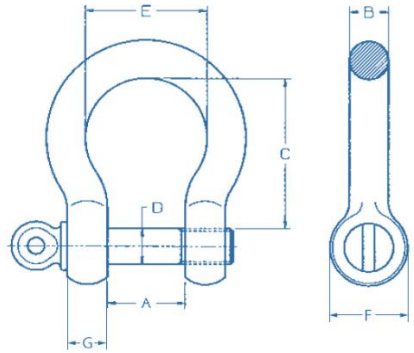


**Názov produktu: Strmeň závesný typ HA2**

| Veľkosť v t | Menovite rozmery (mm) A | B | C | D | F | G | | | | | | | | | | | Hmotnosť kg/ks | Pracovné zaťaženie v t | | Materiál | Povrch |
|---|---|---|---|---|---|---|---|---|---|---|---|---|---|---|---|---|---|---|---|---|---|
| 0,50 | 11,9 | 6,4 | 22,4 | 7,9 | 16,0 | 6,0 | | | | | | | | | | | 0,050 | 0,5 | | Vysokopevnostná oceľ | Pozinkované |
| 0,75 | 13,5 | 7,9 | 26,2 | 9,7 | 19,0 | 8,0 | | | | | | | | | | | 0,090 | 0,8 | | | |
| 1,00 | 16,8 | 9,7 | 31,8 | 11,2 | 23,0 | 10,0 | | | | | | | | | | | 0,140 | 1,0 | | | |
| 1,50 | 19,1 | 11,2 | 36,6 | 12,7 | 27,0 | 11,0 | | | | | | | | | | | 0,172 | 1,5 | | | |
| 2,00 | 20,6 | 12,7 | 41,4 | 16,0 | 30,0 | 13,0 | | | | | | | | | | | 0,330 | 2,0 | | | |
| 3,25 | 26,9 | 16,0 | 50,8 | 19,1 | 39,0 | 16,0 | | | | | | | | | | | 0,630 | 3,3 | | | |
| 4,75 | 31,8 | 19,1 | 60,5 | 22,4 | 47,0 | 19,0 | | | | | | | | | | | 1,100 | 4,8 | | | |
| 6,50 | 36,6 | 25,4 | 71,3 | 25,4 | 54,0 | 22,0 | | | | | | | | | | | 1,650 | 6,5 | | | |
| 8,50 | 42,9 | 25,4 | 81,0 | 28,7 | 60,0 | 25,0 | | | | | | | | | | | 2,300 | 8,5 | | | |
| 9,50 | 46,0 | 28,7 | 90,9 | 31,8 | 68,0 | 29,0 | | | | | | | | | | | 3,400 | 9,5 | | | |
| 12,00 | 51,6 | 31,8 | 100,0 | 35,1 | 76,0 | 32,0 | | | | | | | | | | | 4,320 | 12,0 | | | |
| 13,50 | 57,2 | 35,1 | 111,2 | 38,1 | 84,0 | 35,0 | | | | | | | | | | | 6,200 | 13,5 | | | |
| 17,00 | 60,5 | 38,1 | 122,1 | 41,4 | 92,0 | 38,0 | | | | | | | | | | | 7,800 | 17,0 | | | |
| 25,00 | 73,2 | 44,5 | 146,0 | 50,8 | 107,0 | 45,0 | | | | | | | | | | | 12,700 | 25,0 | | | |
| 35,00 | 82,6 | 50,8 | 171,4 | 57,2 | 122,0 | 51,0 | | | | | | | | | | | 20,430 | 35,0 | | | |
| 42,50 | 95,0 | 57,0 | 190,0 | 65,0 | 134,0 | 57,0 | | | | | | | | | | | 29,100 | 42,5 | | | |
| 55,00 | 104,9 | 66,5 | 203,2 | 69,9 | 145,0 | 64,0 | | | | | | | | | | | 39,000 | 55,0 | | | |
| 85,00 | 127,0 | 75,0 | 230,0 | 80,0 | 165,0 | 76,2 | | | | | | | | | | | 62,300 | 85,0 | | | |
| | | | | | | | | | | | | | | | | | | | | | |
| | | | | | | | | | | | | | | | | | | | | | |